InGaAs PIN Photodiode (1.7-µm Wavelength Cutoff)

PIN0500-17-D/TO:	Ø 455 µm	Detection Aperture
PIN1000-17-D/TO/T1/C:	Ø 950 µm	Detection Aperture
PIN2000-17-D/TO/T2/C:	Ø 1850 µm	Detection Aperture
PIN3000-17-D/TO:	Ø 3000 µm	Detection Aperture
PIN5000-17-D:	Ø 5000 µm	Detection Aperture

FEATURES

- Highly Reliable Planar Device
- Low Leakage Current
- High Shunt Resistance
- High Responsivity
- Low Stray Absorption

APPLICATIONS

- Power Monitoring
- Spectral Analysis
- Light Detection and Ranging (LIDAR)
- Remote Temperature Sensors
- Humidity Detection
- Ice/Slush Detection
- Gas Leak Detection
- Single-Photodiode SWIR Detection
- Covert IR Sensing
- Optical Powering

ANDANTA GmbH • Ilzweg 7+9 • 82140 Olching/Germany • Internet: www.andanta.de
Tel: +49.8142.41058-0 • Fax: +49.8142.41058-29 • e-mail: epost@andanta.de

GENERAL DESCRIPTIONS

Model No.	Spectral Range µm	Aperture Size µm	Package Type
PIN0500-17-D	0.9-1.7	Ø 455	---
PIN0500-17-TO			TO-46 / 3P
PIN1000-17-D		Ø 950	---
PIN1000-17-TO			TO-46 / 3P
PIN1000-17-T1			TO-46 / 5P
PIN1000-17-C			6CLCC (3.0 SQ)
PIN2000-17-D		Ø 1850	---
PIN2000-17-TO			TO-39 / 3P
PIN2000-17-T2			TO-39 / 8P
PIN2000-17-C			8CLCC (5.0 SQ)
PIN3000-17-D		Ø 3000	---
PIN3000-17-TO			TO-39 / 3P
PIN5000-17-D		Ø 5000	---

ABSOLUTE MAXIMUM RATINGS

Model No.	Reverse Voltage		Reverse Current		Forward Current		Ambient Temperature[1]			
							In Operation		In Storage	
	V		mA		mA		°C		°C	
	Min.	Max.	Min.	Max.	Min.	Max.	Min.	Max.	Min.	Max.
PIN0500-17-D	---	20	---	10	---	10	-40	+85	-40	+125
PIN0500-17-TO									-40	+85
PIN1000-17-D	---	20							-40	+125
PIN1000-17-TO									-40	+85
PIN1000-17-T1									-40	+85
PIN1000-17-C									-40	+85
PIN2000-17-D	---	15							-40	+125
PIN2000-17-TO									-40	+85
PIN2000-17-T2									-40	+85
PIN2000-17-C									-40	+85
PIN3000-17-D	---	10							-40	+125
PIN3000-17-TO									-40	+85
PIN5000-17-D	---	5							-40	+125

1) Non-condensing environment

SPECIFICATIONS (T_{AMB} = 23°C)

Model No.	Dark Current		Shunt Resistance		Capacitance				3dB Bandwidth	
	nA		MΩ		pF				MHz	
	@ -5 V		@ -10 mV		@ 1 MHz, 0V		@ 1 MHz, -5 V		@ -5 V, 50 Ω	
	Typ.	Max.	Min.	Typ.	Typ.	Max.	Typ.	Max.	Min.	Typ.
PIN0500-17-D	0.3	0.6	150	500	35	50	20	25	80	100
PIN0500-17-TO										
PIN1000-17-D	1	2	50	200	120	160	60	80	30	40
PIN1000-17-TO										
PIN1000-17-T1										
PIN1000-17-C										
PIN2000-17-D	5	10	10	40	400	800	200	400	8	15
PIN2000-17-TO										
PIN2000-17-T2										
PIN2000-17-C										
PIN3000-17-D	10	20	5	20	900	1300	500	700	4.5	6
PIN3000-17-TO										
PIN5000-17-D	25	50	2	8	1800	2200	1400	1600	1.5	2

Model No.	Responsivity						Saturation Power[2]		NEP	
	A/W						mW		10^{-14} W/√Hz	
	@ 0.85 µm, 0 V		@ 1.30 µm, 0 V		@ 1.55 µm, 0 V		@ 1.55 µm, 0 V, -0.2 dB		@ 1.55 µm, - 0 V, 1 kHz	
	Min.	Typ.	Min.	Typ.	Min.	Typ.	Min.	Typ.	Typ.	Max.
PIN0500-17-D	0.1	0.2	0.85	0.95	0.95	1.0	5	7	0.5	1
PIN0500-17-TO	0.1	0.15	0.8	0.9	0.9	0.95				
PIN1000-17-D	0.1	0.2	0.85	0.95	0.95	1.0	5	7	1.2	2.4
PIN1000-17-TO	0.1	0.15	0.8	0.9	0.9	0.95				
PIN1000-17-T1	0.1	0.2	0.85	0.95	0.95	1.0				
PIN1000-17-C	0.1	0.15	0.8	0.9	0.85	0.95				
PIN2000-17-D	0.1	0.2	0.85	0.95	0.95	1.0	2	4	2.4	4.8
PIN2000-17-TO	0.1	0.15	0.8	0.9	0.9	0.95				
PIN2000-17-T2	0.1	0.2	0.85	0.95	0.95	1.0				
PIN2000-17-C	0.1	0.15	0.8	0.9	0.85	0.95				
PIN3000-17-D	0.1	0.2	0.85	0.95	0.95	1.0	1.5	3	4	8
PIN3000-17-TO	0.1	0.15	0.8	0.9	0.9	0.95				
PIN5000-17-D	0.1	0.2	0.85	0.95	0.95	1.0	0.1	0.2	6	12

Max. Cooling Capability, ΔT_{MAX} [3] °C $T_{Heatsink}$=20 °C	PIN1000-17-T1		PIN2000-17-T2	
	Min.	35	Min.	55
	Typ.	40	Typ.	60

2) Measured at the aperture center wlth an $1/e^2$ beam diameter of 250 µm.
3) Adequate heatsink and thermal interface material are the prerequisites for stable operation.

CHIP DIAGRAM (Unit: µm)

PIN0500-17-D	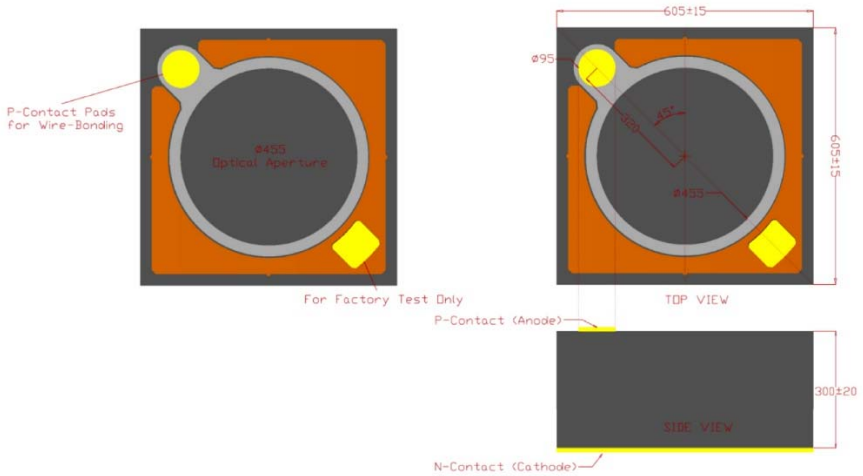
PIN1000-17-D	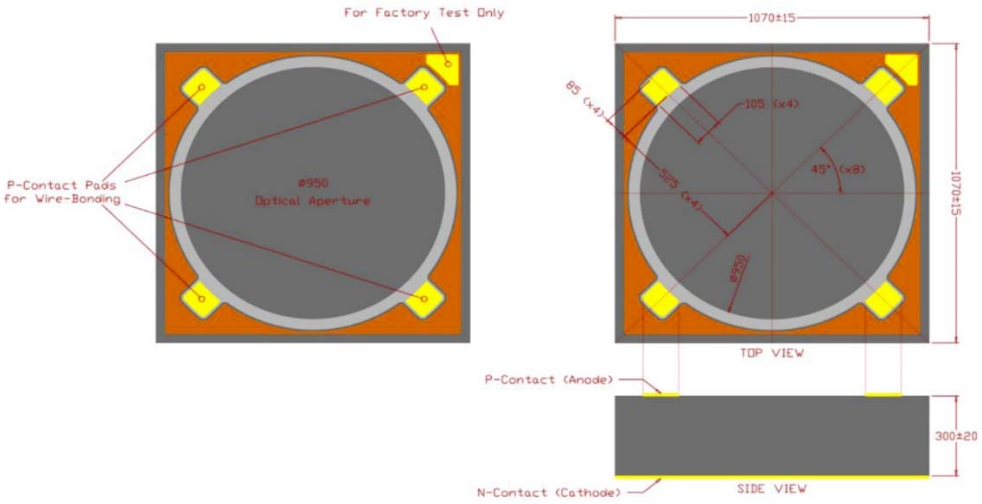

PIN2000-17-D	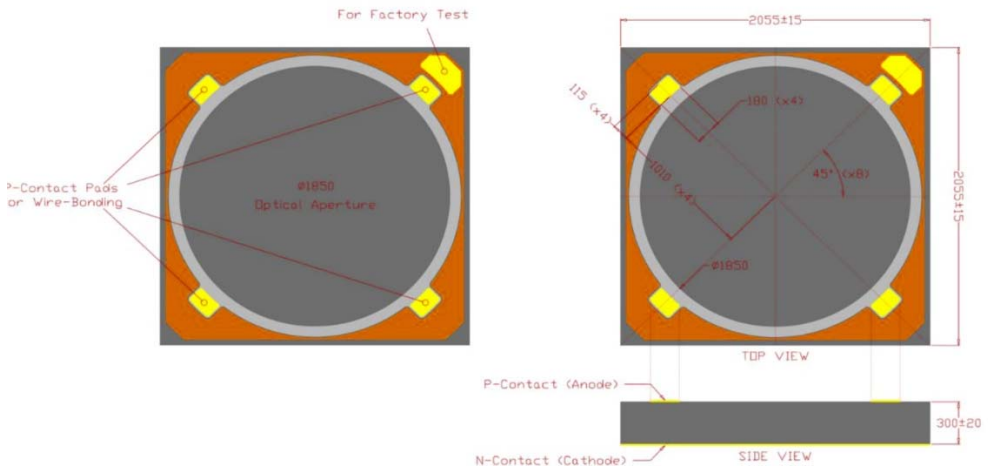
PIN3000-17-D	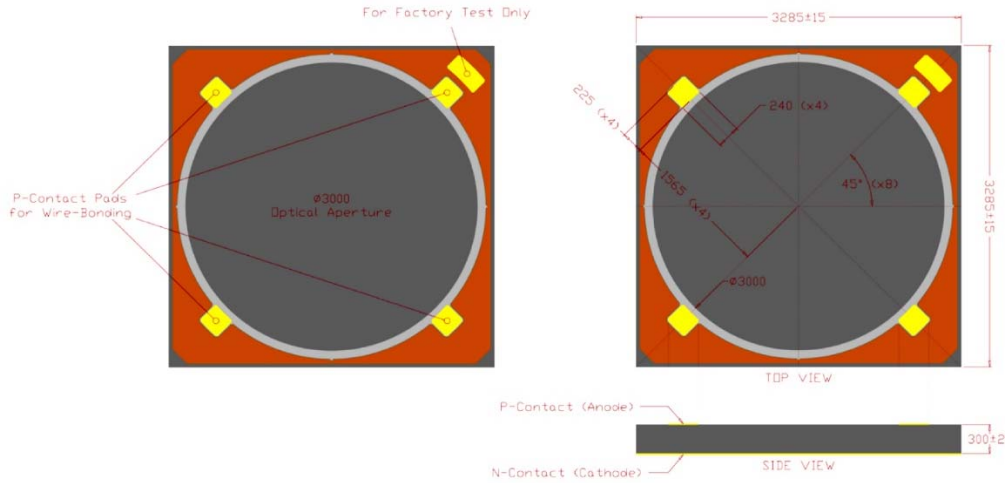
PIN5000-17-D	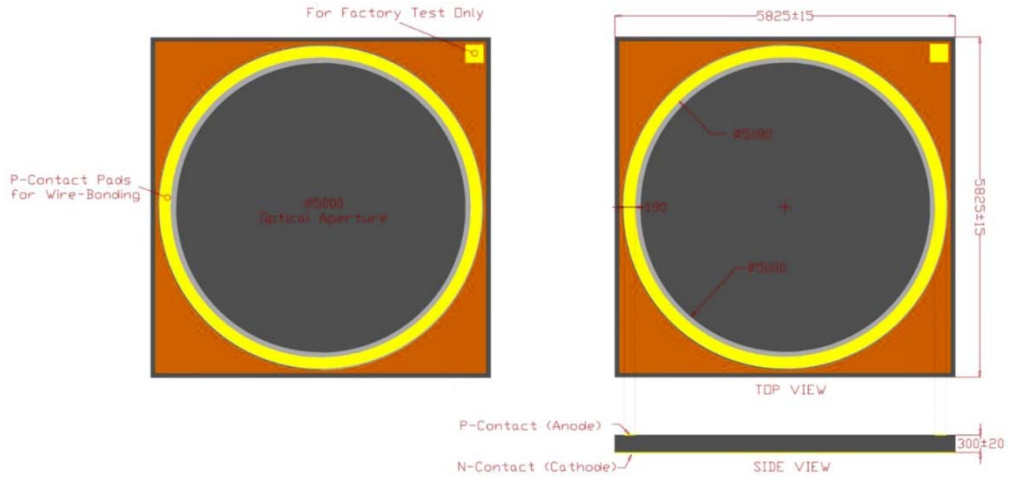

PACKAGE OUTLINE (Unit: mm)

PIN0500-17-TO
PIN1000-17-TO

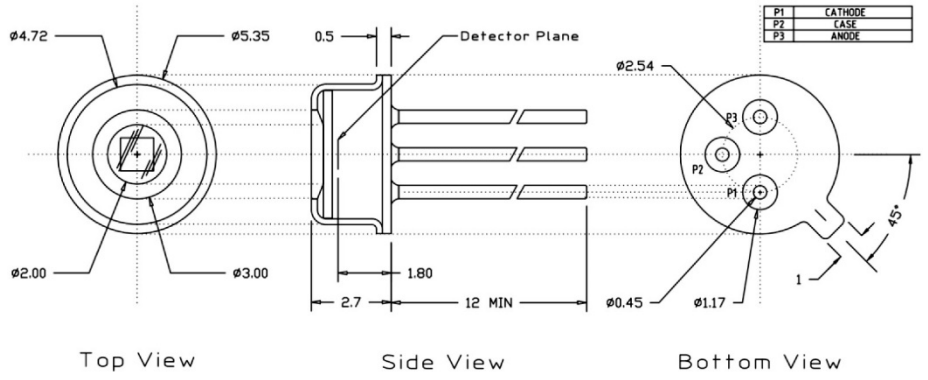

PIN1000-17-T1

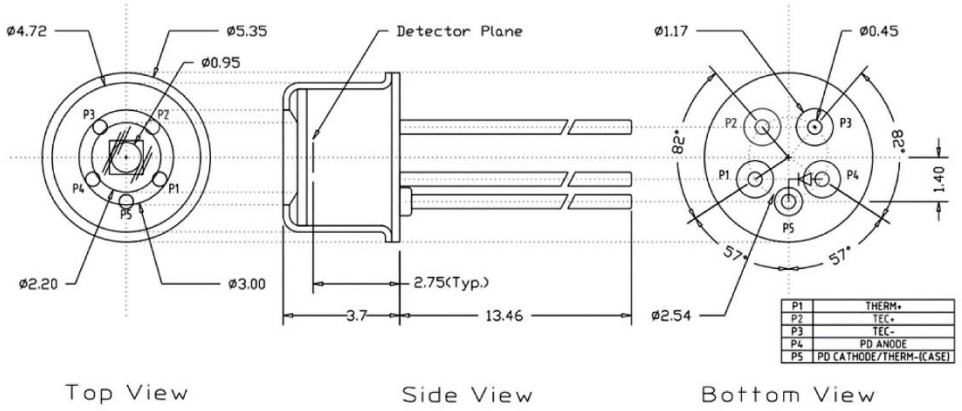

PIN2000-17-TO
PIN3000-17-TO

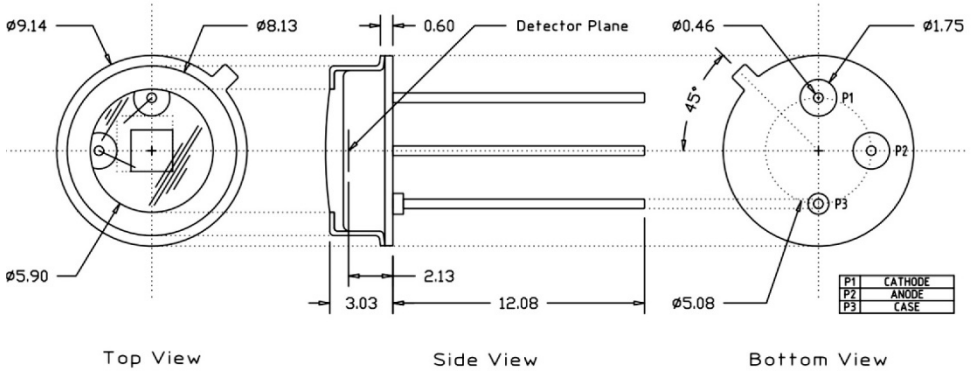

PIN2000-17-T2	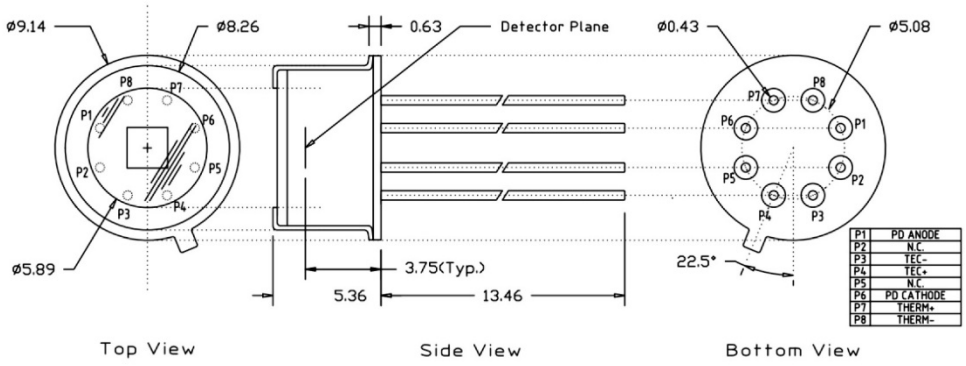

Note: Product serial numbers of PINxxxx-17-Tx are printed on the side wall of the cap.

PIN1000-17-C	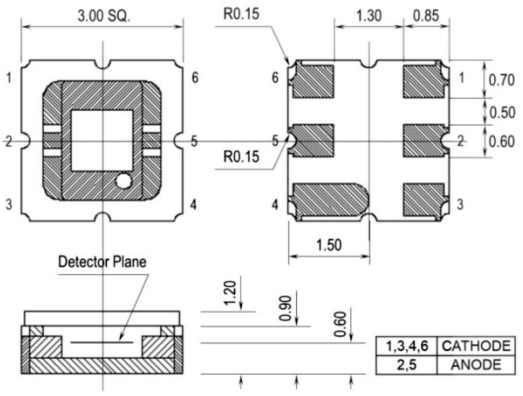

PIN2000-17-C	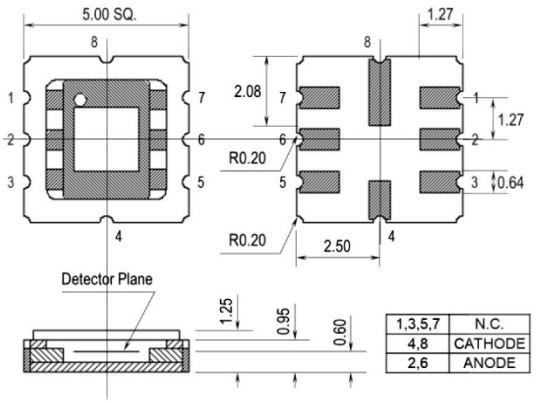

Note: Product serial numbers of PINxxxx-17-C are printed on the back side of the package.

EXAMPLE CURVES (T_{AMB} = 23 °C)

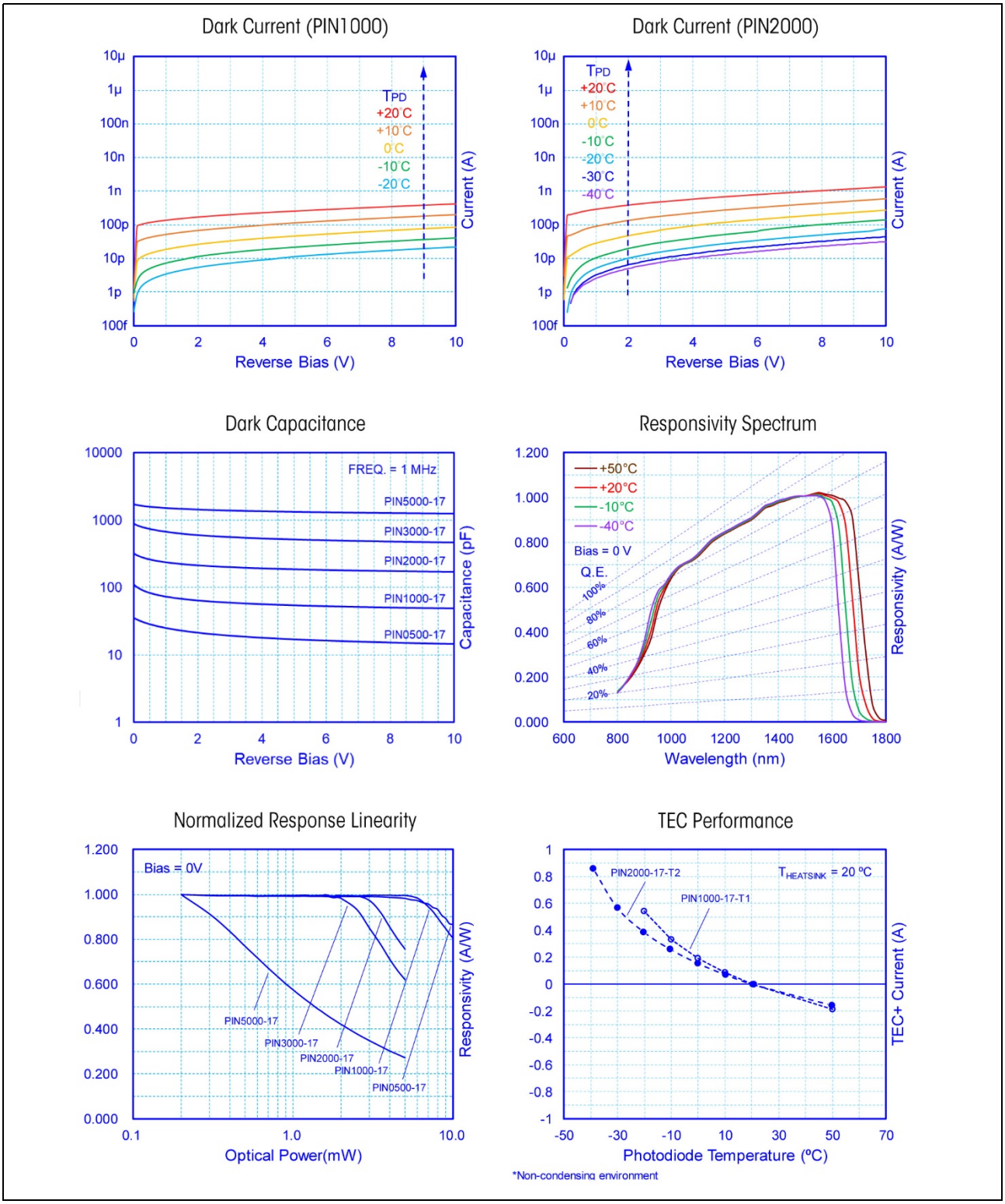

Copyright © 2023 ANDANTA GmbH. The information in this document is subject to change without notice. All rights reserved.